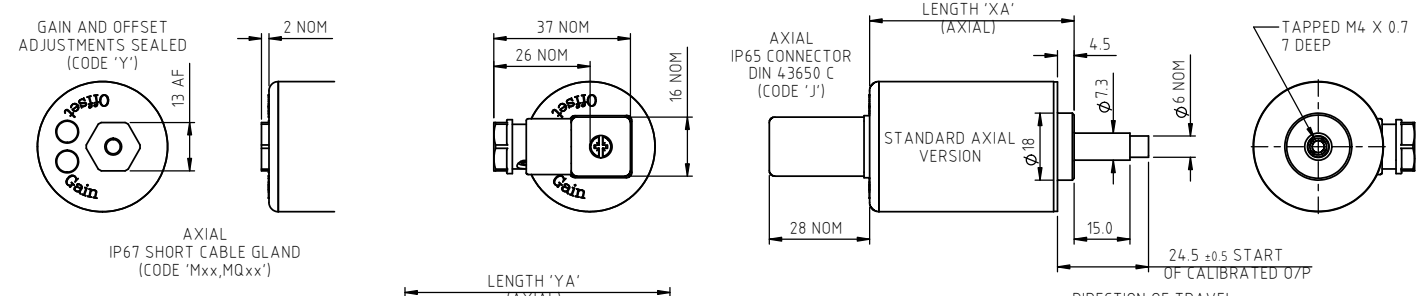

ELECTRICAL OPTIONS/ SPECIFICATIONS

OUTPUT	SUPPLY (NOM.)
'A' 0.5 - 4.5V RATIOMETRIC	5V

SUPPLY CURRENT 12mA TYP. 20mA MAX.

CONNECTIONS;	CABLE 3-CORE	CABLE 5-CORE	CONNECTOR
+Ve	RED	RED	:1
+ SENSE (5-WIRE ONLY)	-	ORANGE	:1
0V	BLACK	BLACK	:3
- SENSE (5-WIRE ONLY)	-	GREY	:3
OUTPUT	WHITE	WHITE	:2
BODY	SCREEN	SCREEN	:4

CABLE: 0.2mm², O/A SCREEN,
PUR JACKET O/D; 3-CORE: Ø4mm, 5-CORE: Ø4.6mm,
SUPPLIED WITH 50cm OR REQUIRED LENGTH IN cm. e.g. 'L50/LQ50' (3/5-CORE)
CONNECTORS; MAXIMUM CONDUCTOR CROSS SECTION 0.75mm²

RANGE OF DISPLACEMENT FROM 0-2mm TO 0-50mm IN
INCREMENTS OF 1mm e.g.36.
BODY MATERIAL:- STAINLESS STEEL.
FLANGE BASE MATERIAL:- STAINLESS STEEL (CODE 'N')

FURTHER OPTIONS:
SINGLE PAIR OF BODY CLAMPS (CODE 'P')
SPRUNG PLUNGER, TO EXTENDED POSITION (CODE 'R')
DOME END (CODE 'T') IN CONJUNCTION WITH SPRUNG PLUNGER (CODE 'R')
PLUNGER FREE (CODE 'V') NOT AVAILABLE WITH SPRUNG OPTION
MAGNETIC TIP (CODE 'WA')

GAIN AND OFFSET ADJUSTMENTS NOT AVAILABLE WITH
RADIAL BODY, CODE 'Ixx' AND 'K' OPTIONS

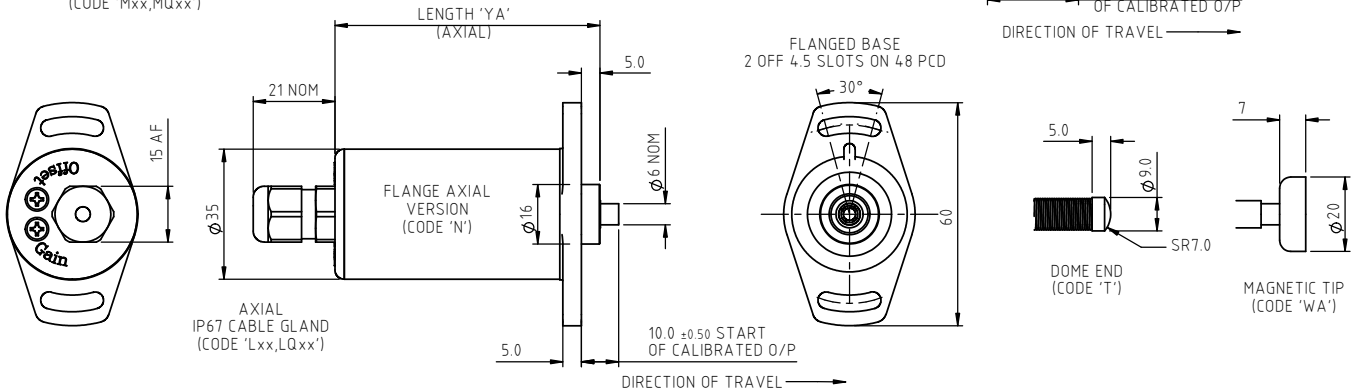

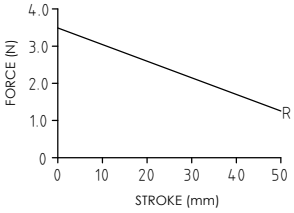

SPRING FORCE VS STROKE
(CODE 'R')

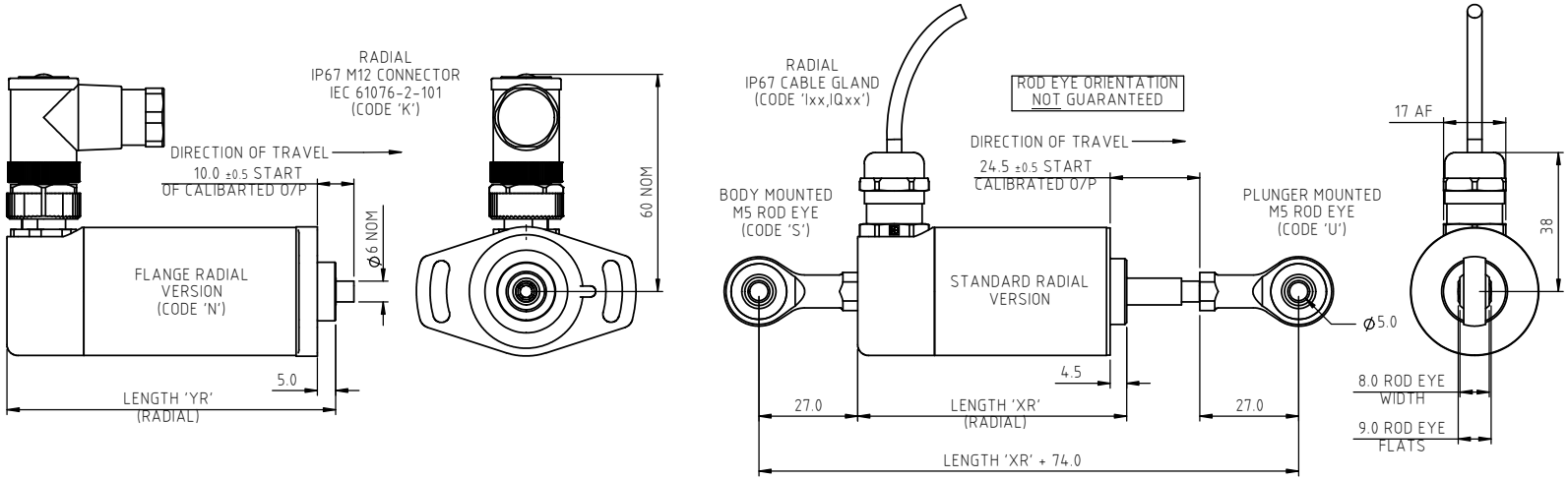

NOTE:- READ INSTALLATION SHEET G000-19
FOR FULL INSTRUCTIONS FOR USE.

CSA APPROVED TO
Class I Zone 0
Ex/AEx ia IIC T4 (Ta= -40 to 80°C)
Ui 11.4V, Ii 0.2A, Pi 0.51W

APPROVED FOR USE IN CONJUNCTION
WITH A GALVANICALLY ISOLATED BARRIER.

NOTE: APPROVAL ONLY APPLIES AT NORMAL
ATMOSPHERIC PRESSURE!

DRAWINGS NOT TO BE CHANGED WITHOUT REFERENCE TO THE CHANGE PROCEDURE.
CHANGES TO PARTS USED IN INTRINSICALLY SAFE PRODUCT MUST BE APPROVED BY THE AUTHORISED PERSON.
THIS IS AN UNCONTROLLED PRINT AND WILL NOT BE UPDATED.

REV	CHANGE HISTORY	DR'WN	DATE	CHK'D
J	MAG TIP & RADIAL END/ROD EYES RAN1311/1312	ASC	31/05/2023	ASC

NOTE: SENSORS WITH TRAVEL UP TO 50mm ARE MADE IN STANDARD LENGTHS

BODY LENGTH (mm)					
TRAVEL (mm)		STANDARD		FLANGE	
CALIBRATED	MECHANICAL	'XA' AXIAL	'XR' RADIAL	'YA' AXIAL	'YR' RADIAL
0-2 TO 0-10	10	65.0	83.5	81.3	99.8
0-11 TO 0-20	20	75.0	93.5	91.3	109.8
0-21 TO 0-30	30	85.0	103.5	101.3	119.8
0-31 TO 0-50	50	105.0	123.5	121.3	139.8

THE PLUNGER RETRACTS 5mm FROM
START OF CALIBRATED TRAVEL
(2mm FOR SPRUNG VERSIONS)
AND EXTENDS 9.5mm* BEYOND END
OF MECHANICAL TRAVEL.
*DOES NOT INCLUDE DIFFERENCE
BETWEEN CALIBRATED AND
MECHANICAL TRAVEL.
DIMENSIONS ARE NOMINAL.
'V' CODED PLUNGER WILL DEPART
SENSOR BODY.

Positek

APPROVED BY	REV		X ±0.4 X.X ±0.2 X.XX ±0.1 DIMS mm
RDM	J		

DESCRIPTION
G103 INTRINSICALLY SAFE
SHORT STROKE LINEAR SENSOR

SCALE 3:4
A3

DRAWING NUMBER
G103-11
SHEET 1 OF 1

Positek

G103 SHORT STROKE LINEAR POSITION SENSOR
INTRINSICALLY SAFE FOR HAZARDOUS GAS/VAPOUR ATMOSPHERES

- **Intrinsically safe for Gas to: Class I, Zone 0 Ex ia / AEx ia**
- **Non-contacting inductive technology to eliminate wear**
- **Travel set to customer's requirement**
- **Short body length**
- **Accurate, stable, durable and reliable**
- **Sealing to IP65/IP67 as required**

As a leading designer and manufacturer of linear, rotary, tilt and intrinsically safe position sensors, Positek® has the expertise to supply a sensor to suit a wide variety of applications.

Our intrinsically safe G103 incorporates electronics system EX06 which is CSA approved for use in potentially explosive **gas/vapour** atmospheres. The G103 is designed for a wide range of industrial applications and is ideal for OEMs seeking good sensor performance in situations where a short-bodied sensor is required for operation in hazardous areas. The unit is compact and space-efficient, being responsive along almost its entire length, and like all Positek® sensors provides a linear output proportional to travel. Each unit is supplied with the output calibrated to the travel required by the customer, from 2 to 50mm and with full EMC protection built in.

Overall performance, repeatability and stability are outstanding over a wide temperature range.

The sensor has a rugged stainless steel body and plunger. It is easy to install and set up, mounting options include flange, M5 rod eye bearings and body clamps. The plunger can be supplied free or captive, with a female M4 thread, an M5 rod eye, magnetic tip, or spring-loaded with a dome end. The G103 also offers a wide range of mechanical options, environmental sealing is to IP65 or IP67 depending on selected cable or connector options.

SPECIFICATION

Dimensions

Body diameter: 35 mm

Body Length (Axial version): Dependant on calibrated travel & mounting option

Calibrated Travel	Standard	Flange mounted
2 mm to 10 mm	65 mm	81.3 mm
11 mm to 20 mm	75 mm	91.3 mm
21 mm to 30 mm	85 mm	101.3 mm
31 mm to 50 mm	105 mm	121.3 mm

Body Length (Radial version): Dependant on calibrated travel & mounting option

Calibrated Travel	Standard	Flange mounted
2 mm to 10 mm	83.5mm	99.8 mm
11 mm to 20 mm	93.5 mm	109.8 mm
21 mm to 30 mm	103.5 mm	119.8 mm
31 mm to 50 mm	123.5 mm	139.8 mm

Plunger: Ø 6mm

For full mechanical details see drawing G103-11

Power Supply: +5V dc nom. ± 0.5V, 10mA typ 20mA max

Output Signal: 0.5-4.5V dc ratiometric, Load: 5kΩ min.

Independent Linearity: ≤ ± 0.25% FSO @ 20°C
≤ ± 0.1% FSO @ 20°C* available upon request.

*Sensors with calibrated travel of 10 mm and above.

Temperature Coefficients: < ± 0.01%/°C Gain &
< ± 0.01%FS/°C Offset

Frequency Response: > 10 kHz (-3dB)

Resolution: Infinite

Noise: < 0.02% FSO

Intrinsic Safety: Class I, Zone 0
Ex ia IIC T4 (Ta = -40°C to +80°C)
AEx ia IIC T4 (Ta = -40°C to +80°C)

Approval only applies to the specified ambient temperature range and atmospheric conditions in the range 0.80 to 1.10 Bar, oxygen ≤ 21%

Sensor Input Parameters (connector option/s): Ui: 11.4V, Ii: 0.20A, Pi: 0.51W. Ci: 1.16µF, Li: 50µH
(cable option/s): Ci: 1.36µF, Li: 710µH with 1km max. cable

Environmental Temperature Limits
Operating: -40°C to +80°C
Storage: -40°C to +125°C

Sealing: IP65/IP67 depending on connector / cable option

EMC Performance: EN 61000-6-2, EN 61000-6-3

Vibration: IEC 68-2-6: 10 g

Shock: IEC 68-2-29: 40 g

MTBF: 350,000 hrs 40°C Gf

Drawing List
G103-11 Sensor Outline
Drawings, in AutoCAD® dwg or dxf format, available on request.

Do you need a position sensor made to order to suit a particular installation requirement or specification? We'll be happy to modify any of our designs to suit your needs - please contact us with your requirements.

256053

For further information please contact:
www.positek.com sales@positek.com
Tel: +44(0)1242 820027 fax: +44(0)1242 820615
Positek, Andoversford Industrial Estate, Cheltenham GL54 4LB. U.K.

G103 SHORT STROKE LINEAR POSITION SENSOR
INTRINSICALLY SAFE FOR HAZARDOUS GAS/VAPOUR ATMOSPHERES

Intrinsically safe equipment is defined as *"equipment which is incapable of releasing sufficient electrical or thermal energy under normal or abnormal conditions to cause ignition of a specific hazardous atmosphere mixture in its most easily ignited concentration."*

CSA approved to;

Class I, Zone 0
Ex ia IIC T4 (Ta = -40°C to +80°C)
AEx ia IIC T4 (Ta = -40°C to +80°C)

Designates the sensor as belonging to; Class I, Zone 0: can be used in areas with continuous, long or frequent periods of exposure to hazardous gas / vapours.

Protection class ia IIC, denotes intrinsically safe for Zones 0, 1 & 2 and IIA, IIB and IIC explosive gases.

Temperature class T4: maximum sensor surface temperature under fault conditions 135°C.

Ambient temperature range extended to -40°C to +80°C.

It is imperative Positek® intrinsically safe sensors be used in conjunction with a galvanic barrier to meet the requirements of the product certification. The Positek G005 Galvanic Isolation Amplifier is purpose made for Positek IS sensors making it the perfect choice. Refer to the G005 datasheet for product specification and output configuration options.

Safety Parameters:-

Ui: 11.4V, Ii: 0.20A, Pi: 0.51W
Ci = 1.36µF* Li = 710µH* (cable option/s)
Ci = 1.16µF Li = 50µH (connector option/s)

*Figures for 1km cable where: Ci = 200pF/m & Li = 660nH/m

Sensors can be installed with a maximum of 1000m of cable.
Cable characteristics must not exceed:-

Capacitance:	≤ 200 pF/m	for max. total of:	200 nF.
Inductance:	≤ 660 nH/m	for max. total of:	660 µH

For cable lengths exceeding 10 metres a five wire connection is recommended to eliminate errors introduced by cable resistance and associated temperature coefficients.

CSA approved sensors suitable for dust (H series, USA only) applications, are also available from Positek.

TABLE OF OPTIONS

CALIBRATED TRAVEL: Factory set to any length from 0-2mm to 0-50mm (e.g. 36mm).

ELECTRICAL INTERFACE OPTIONS

Sensors supplied with access to output 'zero' and 'span' calibration adjustments as standard. No access option available.

The Positek® **G005** Galvanic Isolation Amplifier is available with the following output options;

Standard:	0.5 - 9.5V or 4 - 20mA.
Reverse:	9.5 - 0.5V or 20 - 4mA.

CONNECTOR/CABLE OPTIONS

Connector - 4-pole DIN 43650 C	Axial, IP65
Connector - 4-pole M12 IEC 61076-2-101	Radial, IP67
Cable with M12 gland or short gland	Axial, IP67
Cable with Pg 9 gland	Radial, IP67

†Three core (black jacket) or five core (blue jacket) cable options available.
Cable length >50 cm – please specify length in cm up to 15000 cm max.

We recommend all customers refer to the 3 or 5-Wire Mode Connection page.

MOUNTING OPTIONS

Flange, Body Tube Clamp (axial or radial versions),
M5 rod eye bearings (radial versions only).

PUSH ROD OPTIONS – Retained† or Free with M4x0.7 female thread, M5 rod eye bearing or Magnetic tip, Spring loaded with or without# Dome end.
† standard, retained with female thread.
# spring supplied loose.

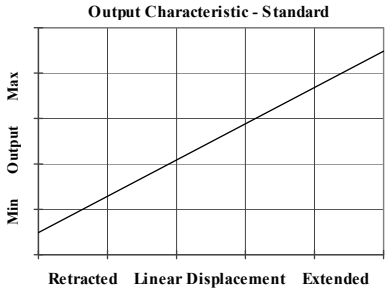

256053

For further information please contact:
www.positek.com sales@positek.com
Tel: +44(0)1242 820027 fax: +44(0)1242 820615
Positek, Andoversford Industrial Estate, Cheltenham GL54 4LB. U.K.

Three or Five-Wire Mode Connection

FOR INTRINSICALLY SAFE SENSORS IN HAZARDOUS ATMOSPHERES

The aim of this document is to help readers who do not understand what is meant by three or five wire modes of connection between the galvanic isolation amplifier and sensor, and the factors behind them. It is by no means an in-depth technical analysis of the subject.

Whether opting for a pre-wired Positek® Intrinsically Safe sensor or one with a connector, choosing the right mode of connection and cable to suit the application requires careful consideration.

Interconnecting cables are not perfect conductors and offer resistance to current flow, the magnitude of resistance† depends on conductors resistivity, which changes with temperature, cross sectional area‡ and length. If the voltage were to be measured at both ends of a length of wire it would be found they are different, this is known as volts drop. Volts drop changes with current flow and can be calculated using Ohm's law, it should be noted that volts drop occurs in both positive and negative conductors. The effects of volts drop can be reduced by increasing the conductors cross sectional area, this does not however eliminate the effects due to temperature variation. There are instances where large cross-section cables are not practical; for example most standard industrial connectors of the type used for sensors have a maximum conductor capacity of 0.75mm², copper prices and ease of installation are other considerations.

This is important because the effects of volts drop can significantly alter the perceived accuracy of the sensor which is ratiometric i.e. the output signal is directly affected by the voltage across the sensor. Changes in temperature will also be seen as gain variation in the sensor output.

Three wire mode connections are common and are suitable in most cases with short or moderate cable runs. Applications that do not require a high degree of accuracy but have cable runs, say in excess of 10m, volts drop can reduced by introducing a terminal box close to the sensor and using a larger cross-section cable for a majority of the cable run. Sensors supplied with three core cable are calibrated with the cable fitted which largely eliminates errors due to conductor resistance at room temperature however, as mentioned above, small gain errors due to temperature fluctuations should be expected.

Five wire mode connections have significant benefits as losses in the positive and negative conductors are compensated for by the galvanic isolation amplifier which can 'sense' the voltage across the sensor and dynamically adjust the output voltage so that the voltage across the sensor is correct. The effects of cable resistance and associated temperature coefficients are eliminated allowing for smaller conductors than a three wire connection for the same cable run. The amplifier can compensate for up to 15Ω per conductor with a current flow of 15mA, which is more than adequate for 150m of 0.25 mm² cable, longer lengths will require larger conductors.

For this reason Positek® recommends five wire connections for cable lengths exceeding 10 metres in 0.25 mm² cable to preserve the full accuracy of the sensor.

See illustrations below for examples of connecting a sensor to the galvanic isolation amplifier.

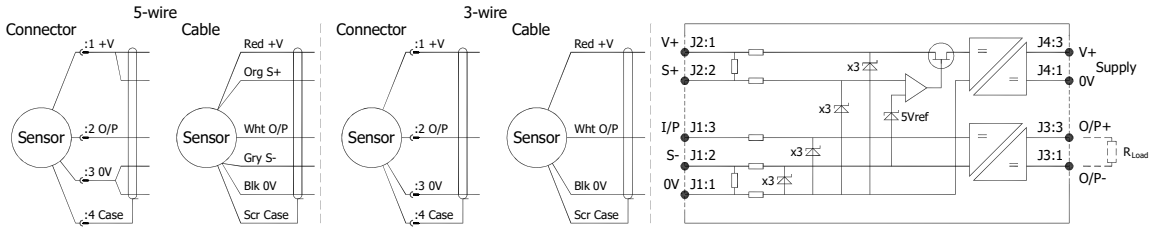

Cable Length (metres)	Up to 150	150 - 300	300 - 450	450 - 600	600 - 900	900 - 1000
Cross Section (mm²)	0.25	0.5	0.75	1.0	1.5	2.0

The table above shows recommended conductor sizes with respect to cable length for both three and five wire connections, based on copper conductors. Three wire connections will introduce a gain reduction of 5% and a ±1% temperature dependence of gain over the range -40°C to +80°C for the cable temperature. (i.e. about –150 ppm/°C for the maximum lengths shown and less pro rata for shorter lengths.)

It should be noted that the maximum cable length, as specified in the sensor certification, takes **precedence** and **must not** be exceeded.

Positek® sensors are supplied with three core 0.25 mm² cable as standard, however five core 0.25 mm² cable can be supplied on request. The galvanic isolation amplifier is available as;

G005-*** for 'G' and 'H' prefix sensors
X005-*** for 'E', 'M' and 'X' prefix sensors

† R = ρL/A ρ is the resistivity of the conductor (Ωm) L is the length of conductor (m) A is the conductor cross-sectional area (m²).
‡ It is presumed that **d**irect **c**urrent flow is uniform across the cross-section of the wire, the galvanic isolation amplifier and sensor are a dc system.

256053

For further information please contact:
www.positek.com sales@positek.com
Tel: +44(0)1242 820027 fax: +44(0)1242 820615
Positek, Andoversford Industrial Estate, Cheltenham GL54 4LB. U.K.

Intrinsically Safe - Gas/Vapour Atmospheres

G103 Short Stroke Position Sensor

		a	b	c	d	e	f	g	h	j	k
G103	.	Displacement	A	Adjustments	Connections	Option	Option	Option	Option	Option	Z-code

a **Displacement** (mm)		**Value**
Displacement in mm	e.g. 0 - 22 mm	**22**

b **Output**		
Supply V dc V_s (tolerance)	**Output**	**Code**
+5V (4.5 - 5.5V)	0.5 - 4.5V (ratiometric with supply)	**A**

c **Calibration Adjustments**		**Code**
Accessible - default†	†Axial body style only. Radial body style sealed by default.	blank
Sealed		**Y**

d **Connections** Cable or Connector		**Code**
Cable Gland - Radial	IP67 metal - 3-core cable	**Ixx**
	IP67 metal - 5-core cable	**IQxx**
Connector - Axial	IP65 DIN 43650 'C'	**J**
	pre-wired - 3-core cable	**Jxx**
	pre-wired - 5-core cable	**JQxx**
Connector - Radial	IP67 M12 IEC 60176-2-101 nylon	**K**
	pre-wired - 3-core cable	**Kxx**
	pre-wired - 5-core cable	**KQxx**
Cable Gland - Axial	IP67 nylon - 3-core cable	**Lxx**
	IP67 nylon- 5-core cable	**LQxx**
Cable Gland†- Axial	IP67 Short - 3-core cable	**Mxx**
	IP67 Short - 5-core cable	**MQxx**

Specify required cable length **'xx'** in cm. e.g. L2000 specifies cable gland with 20 m of cable, 50 cm supplied as standard. †Nb: restricted cable pull strength.

e **Housing**		**Code**
Standard - default		blank
Flange Mount		**N**
M5 Rod-eye Bearing	Radial body style only	**S**

f **Body Fittings**	**Code**
None - default	blank
Body Clamps - 1 pair	**P**

g **Sprung Plunger**		**Code**
None - default		blank
Spring Extend	Captive plunger only.	**R**

h **Plunger Fittings**		**Code**
None - default	Female Thread M4x0.7x7 deep	blank
Dome end	Requires option 'R'	**T**
M5 Rod-eye Bearing		**U**
Magnetic Tip		**WA**

j **Plunger Options**		**Code**
Captive - default	Plunger is retained	blank
Non-captive	Plunger can depart body	**V**

k **Z-code**	**Code**
Calibration to suit G005 - Default	**Z000**
Connector IP67 M12 IEC 60176-2-101 must have options 'Y' & 'J'	**Z600**
Connector IP67 M12 IEC 60176-2-101 must have option 'J'	**Z601**
≤± 0.1% @20°C Independent Linearity displacement between 10mm & 50mm only!	**Z650**

Note!

All Intrinsically Safe (IS) sensors must have a Z-code suffix.
IS sensors must be used in conjunction with a Galvanic Isolation Amplifier - See G005 for Output options.

Generic Installation Information

G SERIES SENSORS

INTRINSICALLY SAFE FOR HAZARDOUS GAS/VAPOUR ATMOSPHERES

CSA Qualified Intrinsically Safe Device Certificate number 13.2588225			Class I, Zone 0 Ex ia IIC T4 (Ta = -40°C to +80°C AEx ia IIC T4 / Ex ia IIC T4(Ta = -40°C to +80°C
Electronics Option	**Output Description:**	**Supply Voltage:** V_s (tolerance)	**Load resistance:**
A	0.5 - 4.5V (ratiometric with supply)	+5V (4.5 - 5.5V)	5kΩ min

Connector Pin Layout:

DIN 43650 C

Earth = Pin '4'.

IEC 60947-5-2

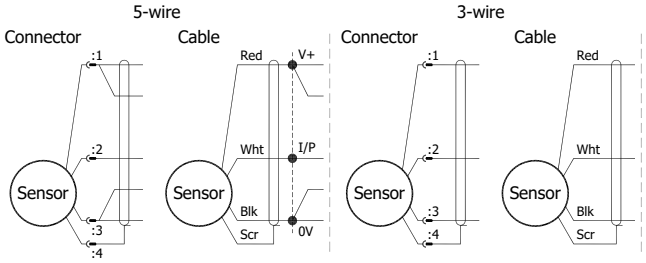

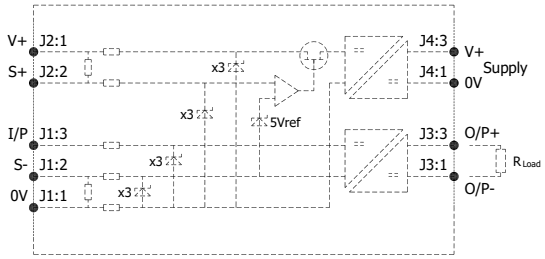

Putting Into Service:

The sensor must be used with a galvanic isolation barrier designed to supply the sensor with a nominal 5V and to transmit the sensor output to a safe area. The barrier parameters must not exceed:-

Ui = 11.4V **Ii = 0.20A** **Pi = 0.51W**
Ci = 1.36µF* **Li = 710µH*** (with maximum length integral cable)
Ci = 1.16µF **Li = 50µH** (without integral cable)

*Figures for 1km cable where: Ci = 200pF/m & Li = 660nH/m

The sensor is certified to be used with up to **1000m** of cable, cable characteristics must not exceed:-
Capacitance: ≤ 200 pF/m for max. total of: 200 nF
Inductance: ≤ 660 nH/m for max. total of: 660 µH

Use:

The sensor is designed to measure Linear or rotary displacement and provide an analogue output signal.

Assembly and Dismantling:

The unit is not to be serviced or dismantled and re-assembled by the user.

WARNING: Substitution of components may impair intrinsic safety
AVERTISSEMENT: La substitution de composants peut altérer la sécurité intrinsèque

Maintenance:

No maintenance is required.

For further information please contact:
www.positek.com sales@positek.com
Tel: +44(0)1242 820027 fax: +44(0)1242 820615
Positek, Andoversford Industrial Estate, Cheltenham GL54 4LB. U.K.

256053

G000-19b

Installation Information

LIPS® G103 SHORT STROKE LINEAR POSITION SENSOR

INTRINSICALLY SAFE FOR HAZARDOUS GAS/VAPOUR ATMOSPHERES

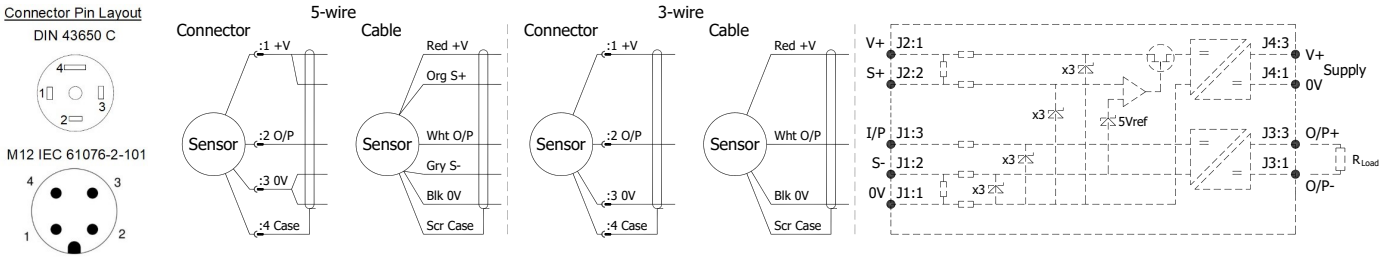

Approval only applies to specified ambient temperature range and atmospheric conditions in the range: 0.80 to 1.10 Bar, oxygen ≤ 21%.

The G103 is available with the following connections:-

IP65	DIN 43650 C Connector	Axial	Option 'J'
IP67	M12 Cable gland with cable	Axial	Options 'Lxx' or 'LQxx'
IP67	Short Cable gland with cable	Axial	Options 'Mxx' or 'MQxx'
IP67	4-pole M12 IEC 61076-2-101 Connector	Radial	Option 'K'
IP67	Pg9 Cable gland with cable	Radial	Options 'Ixx' or 'IQxx'

The performance of the sensor may be affected by voltage drops associated with long cable lengths; For cable lengths exceeding 10 metres a five wire connection is recommended to eliminate errors introduced by cable resistance and associated temperature coefficients.

Cable Up to 150m of 0.2 mm², screened, PUR jacket; 3 core cable 4 mm dia. black,
5 core cable 4.6 mm dia. Blue.

N.b. sensors supplied with cable, the free end must be appropriately terminated.

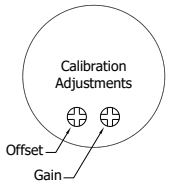

Warning - The IEC 61076 connector may be rotated for purposes of convenient orientation of the connector and cable, however rotating the connector more than one complete revolution is not recommended.
Repeated rotation of the connector will damage the internal wiring!

Gain and Offset Adjustment: (Where accessible - Typically ± 10% Min available)
To adjust the gain or offset use a small potentiometer adjuster or screwdriver 2mm across. Do not apply too much force on the potentiometers.

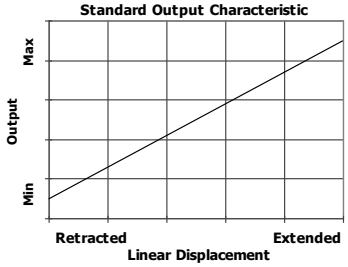

Mechanical Mounting Options:
Flange mounted via two 4.5mm x 30° slots on a 48mm pitch.
Body and plunger mounted M5 rod eye bearings.
Clamping the sensor body - body clamps are available, if not already ordered.
Plunger mounted by M4x0.7 female thread.

Output Characteristic: Plunger extended, at start of normal travel, from mounting face by:
Standard body : 24.5 mm*
Flanged body : 10 mm*
*Note: where ball end option is fitted add 5 mm.
The output increases as the plunger extends from the sensor body, the calibrated stroke is between 2 mm and 50 mm.

Incorrect Connection Protection levels: Not protected – the sensor is **not** protected against either reverse polarity or over-voltage. The risk of damage should be minimal where the supply current is limited to less than 50mA.

For further information please contact:
www.positek.com sales@positek.com
Tel: +44(0)1242 820027 fax: +44(0)1242 820615
Positek, Andoversford Industrial Estate, Cheltenham GL54 4LB. U.K.

256053

G103-19d